ALLEGION™

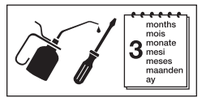

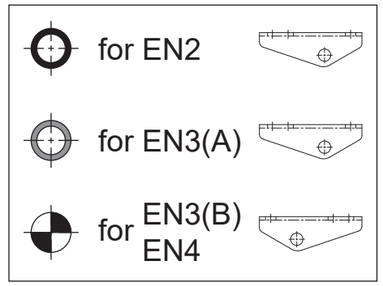

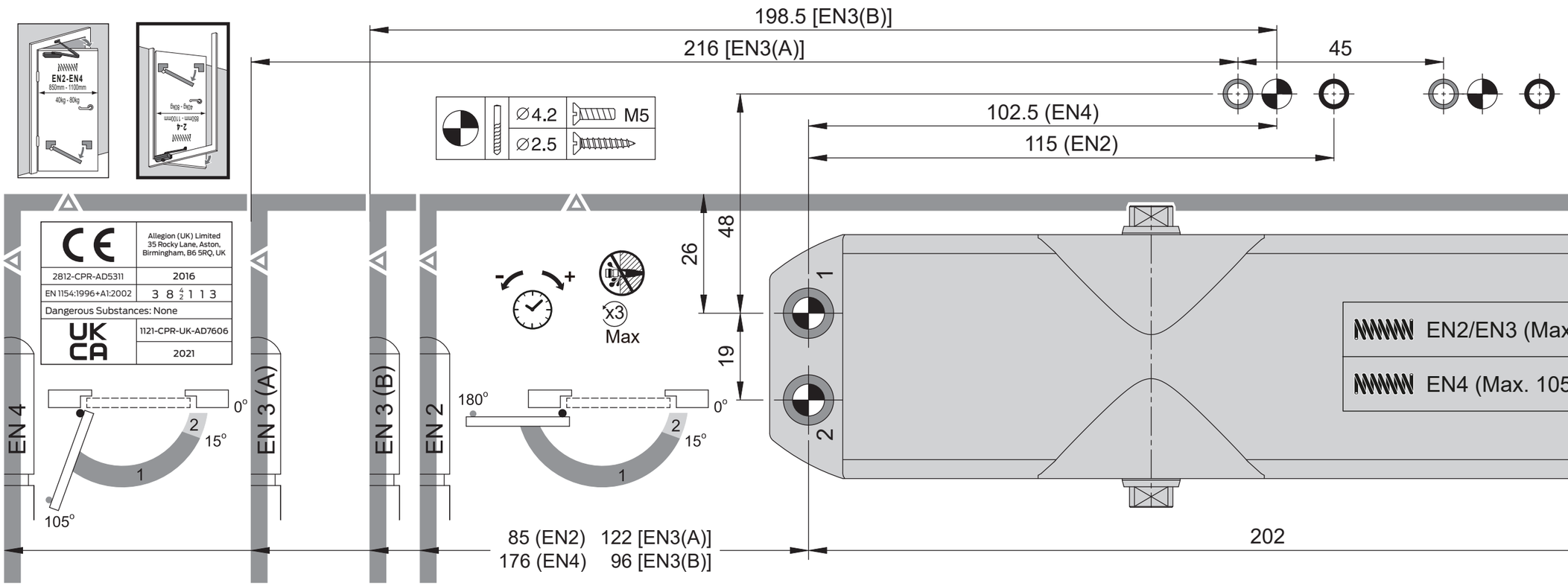

CE	Allegion (UK) Limited 35 Rocky Lane, Aston, Birmingham, B6 5RQ, UK
2812-CPR-AD5311	2016
EN 1154:1996+A1:2002	3 8 4/2 1 1 3
Dangerous Substances: None	
UK CA	1121-CPR-UK-AD7606
	2021

certifire
CF 5512

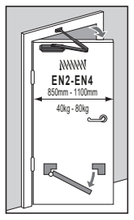

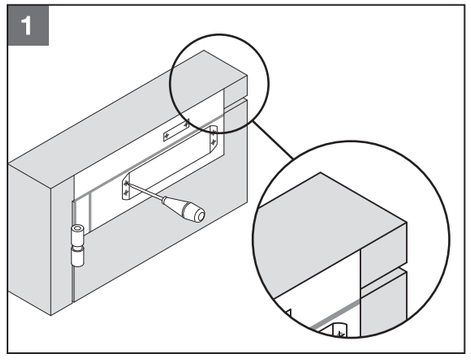

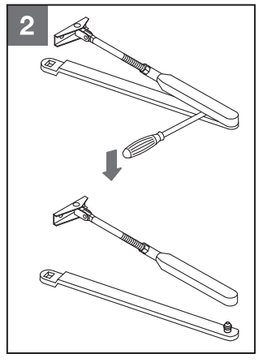

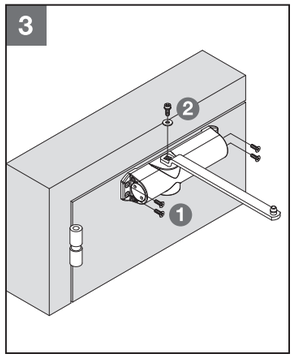

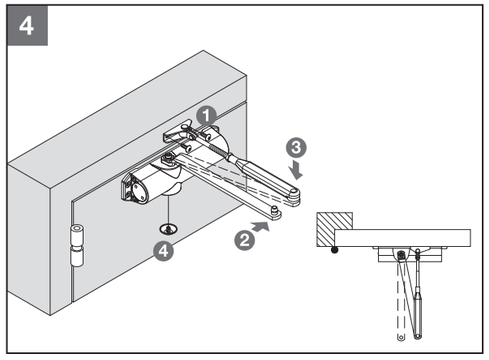

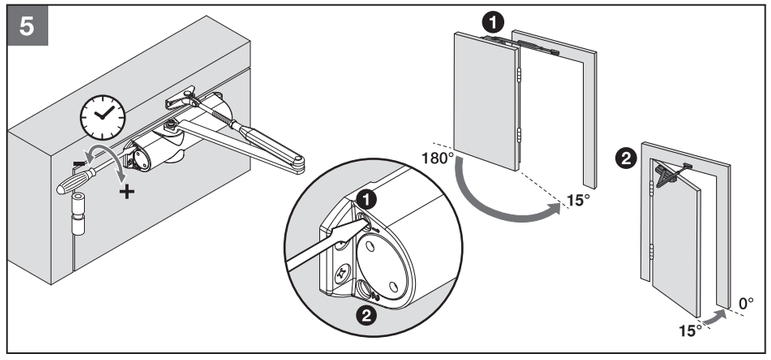

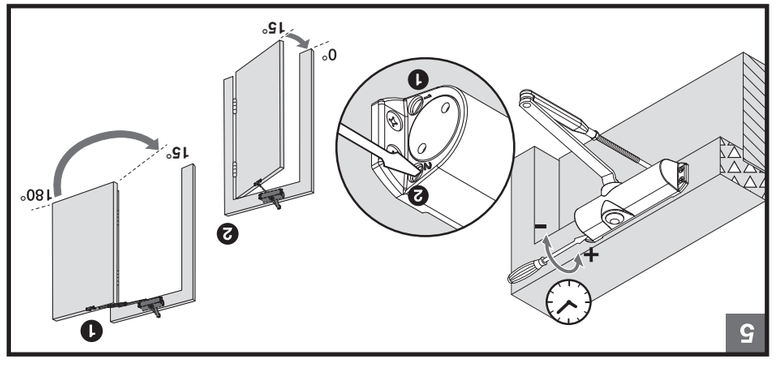

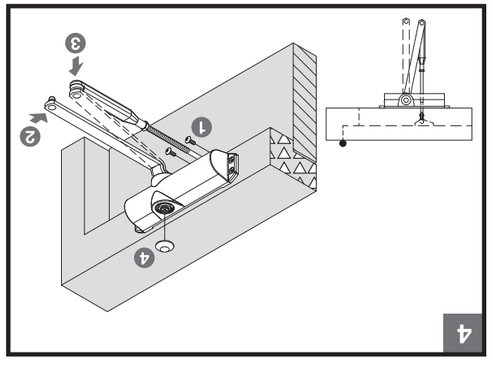

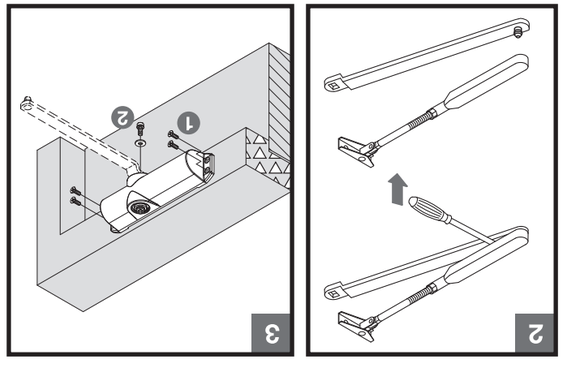

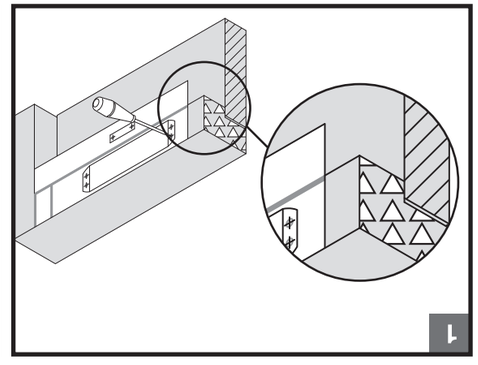

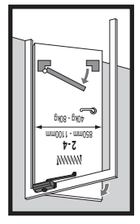

11008 ZINS-KA1090-5D

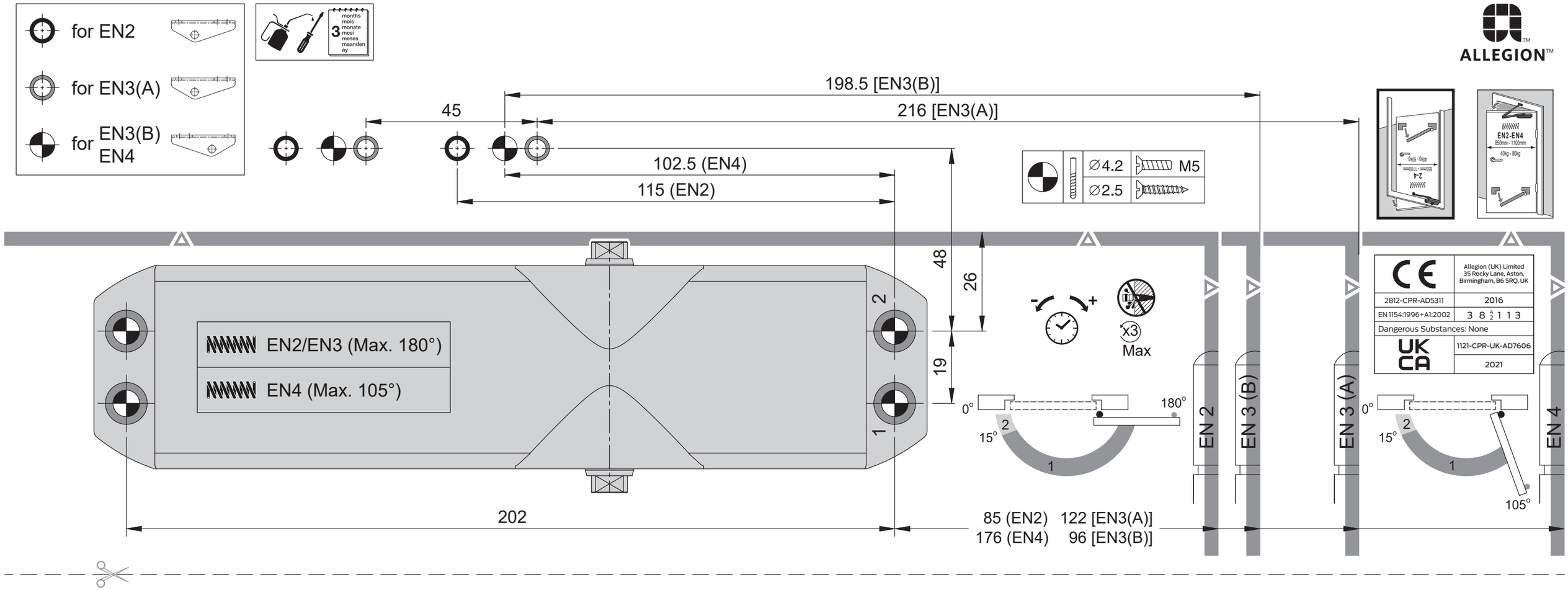
for EN2
for EN3(A)
for EN3(B) EN4
3 months mois monate mesi meses maanden ay
ALLEGION
198.5 [EN3(B)]
216 [EN3(A)]
45
102.5 (EN4)
115 (EN2)
⌀4.2
M5
⌀2.5
48
26
19
EN2/EN3 (Max. 180°)
EN4 (Max. 105°)
2
1
x3
Max
0°
15°
180°
105°
202
85 (EN2) 122 [EN3(A)]
176 (EN4) 96 [EN3(B)]
EN 2
EN 3 (B)
EN 3 (A)
EN 4
Allegion (UK) Limited
35 Rocky Lane, Aston,
Birmingham, B6 5RQ, UK
2812-CPR-AD5311
2016
EN 1154:1996+A1:2002
3 8 4/2 1 1 3
Dangerous Substances: None
1121-CPR-UK-AD7606
2021
EN2-EN4
850mm - 1100mm
40kg - 80kg
2-4
850mm - 1100mm
40kg - 80kg

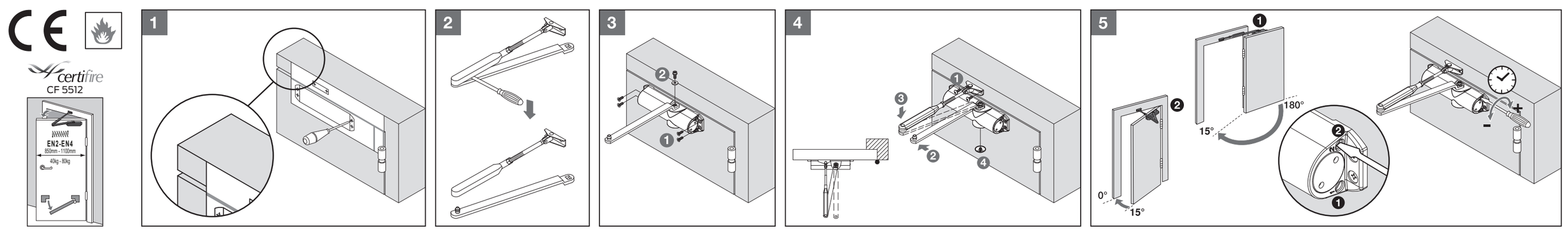
certifire
CF 5512
EN2-EN4
850mm - 1100mm
40kg - 80kg
1
2
3
4
5
0°
15°
180°

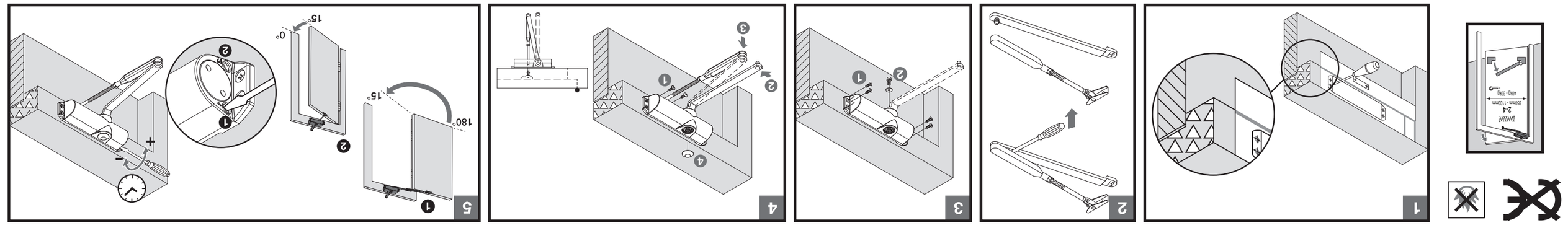
1
2
3
4
5
2-4
850mm - 1100mm
40kg - 80kg
180°
15°
0°